Connection hoses and cables	
Water hose:	✓
Waste water hose:	✓ 2x
Electric cable:	✓

COPYRIGHT EUROWAGON, s.r.o.®

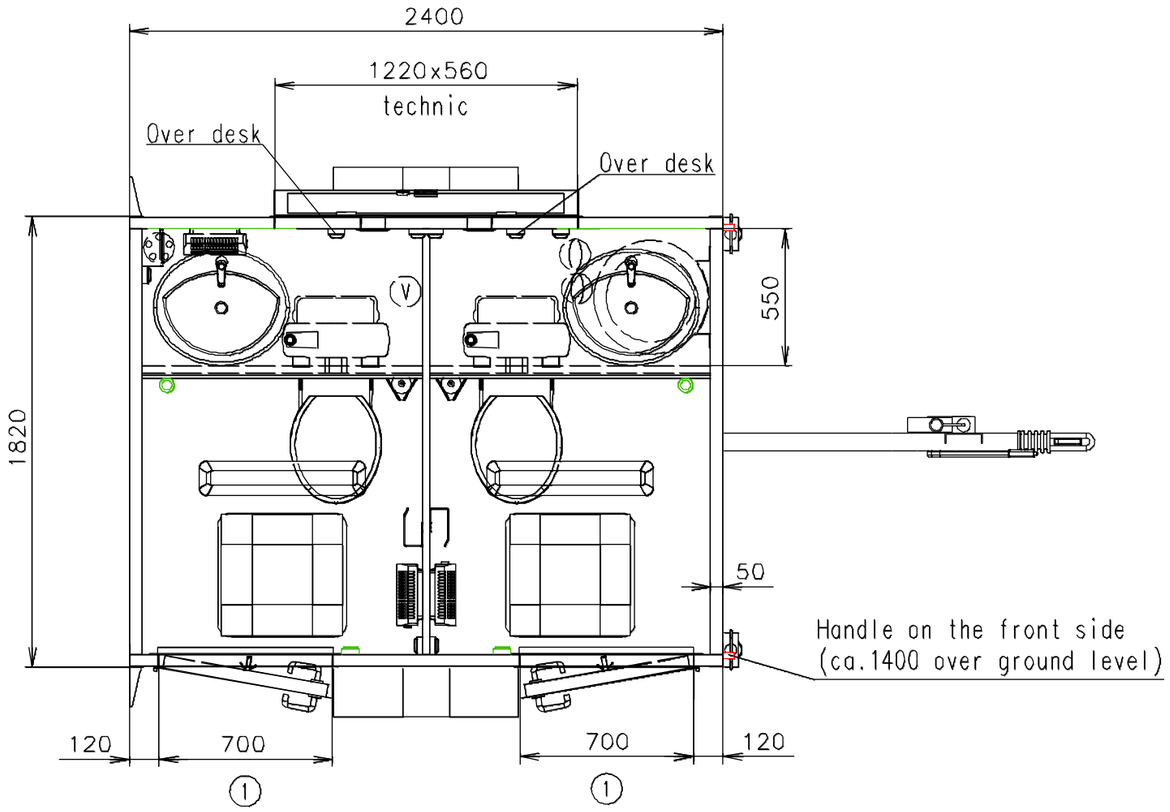

Notes:

Interior height:	2100 mm	Total weight:	750 kg
Color:	RAL 9010	Tare weight:	660 kg
Floor:	PVC black	Centre of wheels from rear side:	1200 mm
Date:	24.6.2015	Wheels:	165/70 R13
EUROWAGON		Drawing number:	2xVIPWC-24-2_1/2

(Cabling and piping is not shown on the 3D views and drawings)

Connection hoses and cables	
Water hose:	✓
Waste water hose:	✓ 2x
Electric cable:	✓

COPYRIGHT EUROWAGON, s.r.o.®

- Water connection 3/4" (through the floor)
- Electric connection (through the floor) (230V-16A)
- 2x Effluent connection 1"
- Power point
- Light switch
- Switch board (500 over floor)
- Droplight
- Heating (500W)
- Floor drain hole
- Wash-basin (built-in) Multi 1690 (550x470) + timing push water tap
- Hanging toilet + pump Setsan
- Hot water boiler Gorenje (30 l) + mixing water
- Roof window Dometic (400x400)
- Ventilation ø120
- Brush toilet
- Toilet paper holder
- Clothes hanger
- Mirror (600x600)
- (1) Stairs Type 17

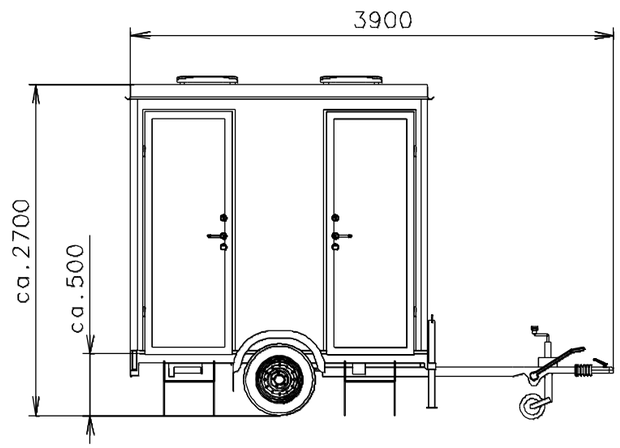

(Cabling and piping is not shown on the 3D views and drawings)

Notes:

Interior height:	2100 mm	Total weight:	750 kg
Color:	RAL 9010	Tare weight:	660 kg
Floor:	PVC black	Centre of wheels from rear side:	1200 mm
Date:	24.6.2015	Wheels:	165/70 R13
EUROWAGON		Drawing number: 2xVIPWC-24-2_2/2	