COPYRIGHT EUROWAGON, s.r.o.®

Connection hoses and cables	
Water hose:	✓
Waste water hose:	✓
Electric cable:	✓

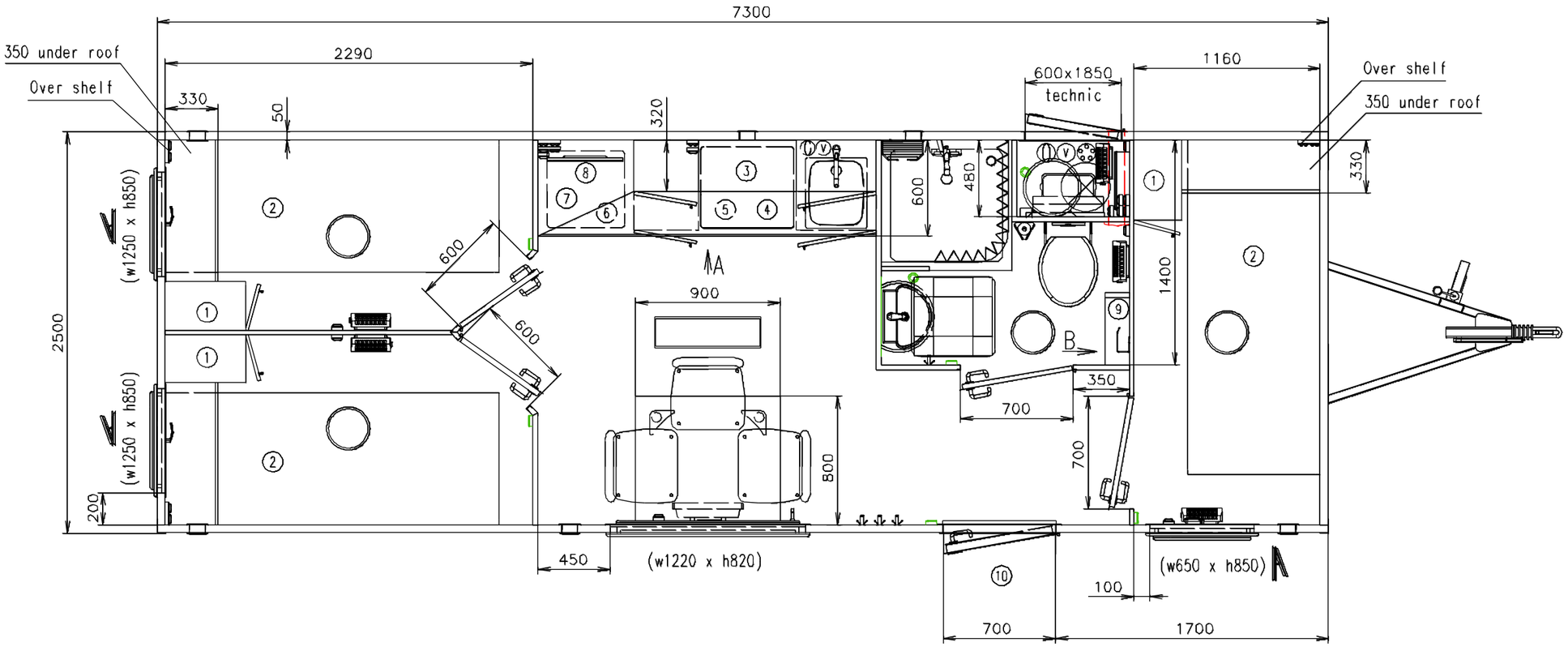

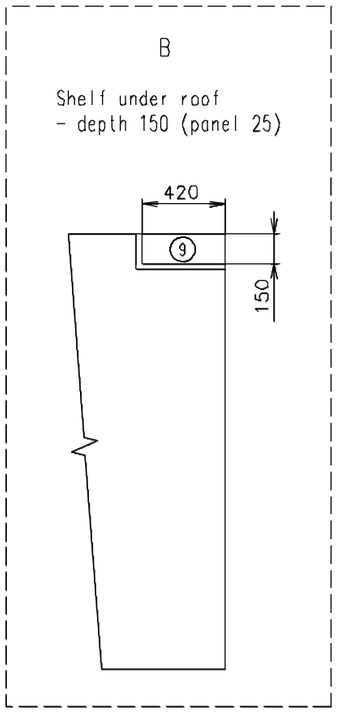

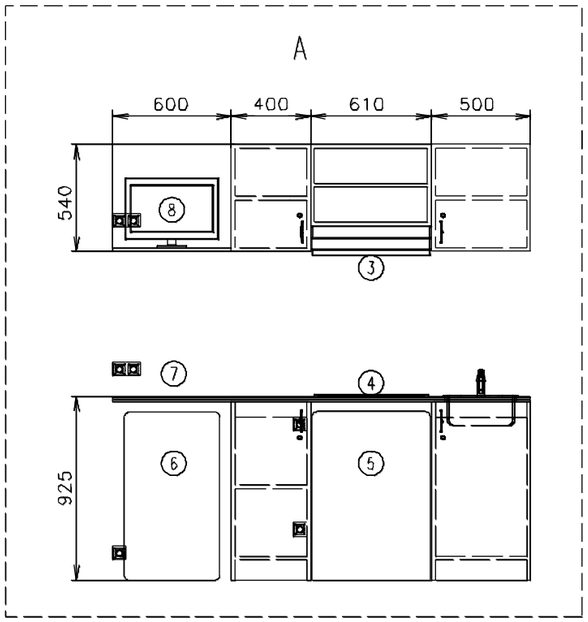

(Cabling and piping is not shown on the 3D views and drawings)

Notes:

Interior height:	2200 mm	Total weight:	2600 kg
Color:	RAL 9010	Tare weight-estimate:	2200 kg
Floor:	PVC gray	Centre of wheels from rear side:	3590 mm
Date:	31.8.2015	Wheels:	165 R13C
EUROWAGON		Drawing number:	33x3-73-3_1/2

COPYRIGHT EUROWAGON, s.r.o.®

Connection hoses and cables	
Water hose:	✓
Waste water hose:	✓
Electric cable:	✓

- Water connection 3/4" (through the floor)
- Electric connection (through the floor) (380V-16A)
- Effluent connection 1"
- Power point
- Double power point
- Light switch
- Switch board (1100 over floor)
- Droplight
- Droplight
- Sensorlight
- Heating (500W)
- Heating (750W)
- Electric ventilator 230V (with light)
- Floor drain hole

- Shower (800x800) Cola
- Kitchen sink Alveus Basic 10 + standard water tap
- Wash-basin Kolo (450x370) + standard water tap
- Hanging toilet + pump Setsan
- Hot water boiler Slim (50 l)
- Window openning inside (870 over floor)
- Window openning out (870 over floor)
- Ventilation ø120
- Roof window Dometic (400x400)
- Chair

- Desk permanent fixed (900x800)
- Brush toilet
- Toilet paper holder
- Shelf steel
- Shower curtain
- Clothes hanger
- Mirror (500x500)
- (1) Cupboard (300 x 500 x 1950)
- (2) Bed (2080 x 825)
- (3) Cooker hood
- (4) Electric cooker - 4 hotplate
- (5) Dishwasher
- (6) Fridge
- (7) Coffee machine
- (8) TV 19" + antenna
- (9) Shelf under roof (sketch)
- (10) Standard hanging stairs - long

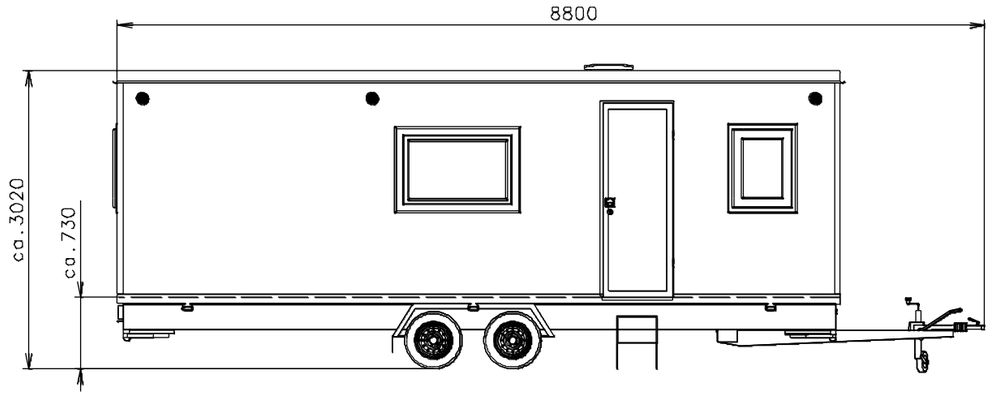

(Cabling and piping is not shown on the 3D views and drawings)

Notes:

Interior height:	2200 mm	Total weight:	2600 kg
Color:	RAL 9010	Tare weight-estimate:	2200 kg
Floor:	PVC gray	Centre of wheels from rear side:	3590 mm
Date:	31.8.2015	Wheels:	165 R13C
EUROWAGON		Drawing number:	33x3-73-3_2/2